Installation Instructions

Horizontal / Vertical Pullmans

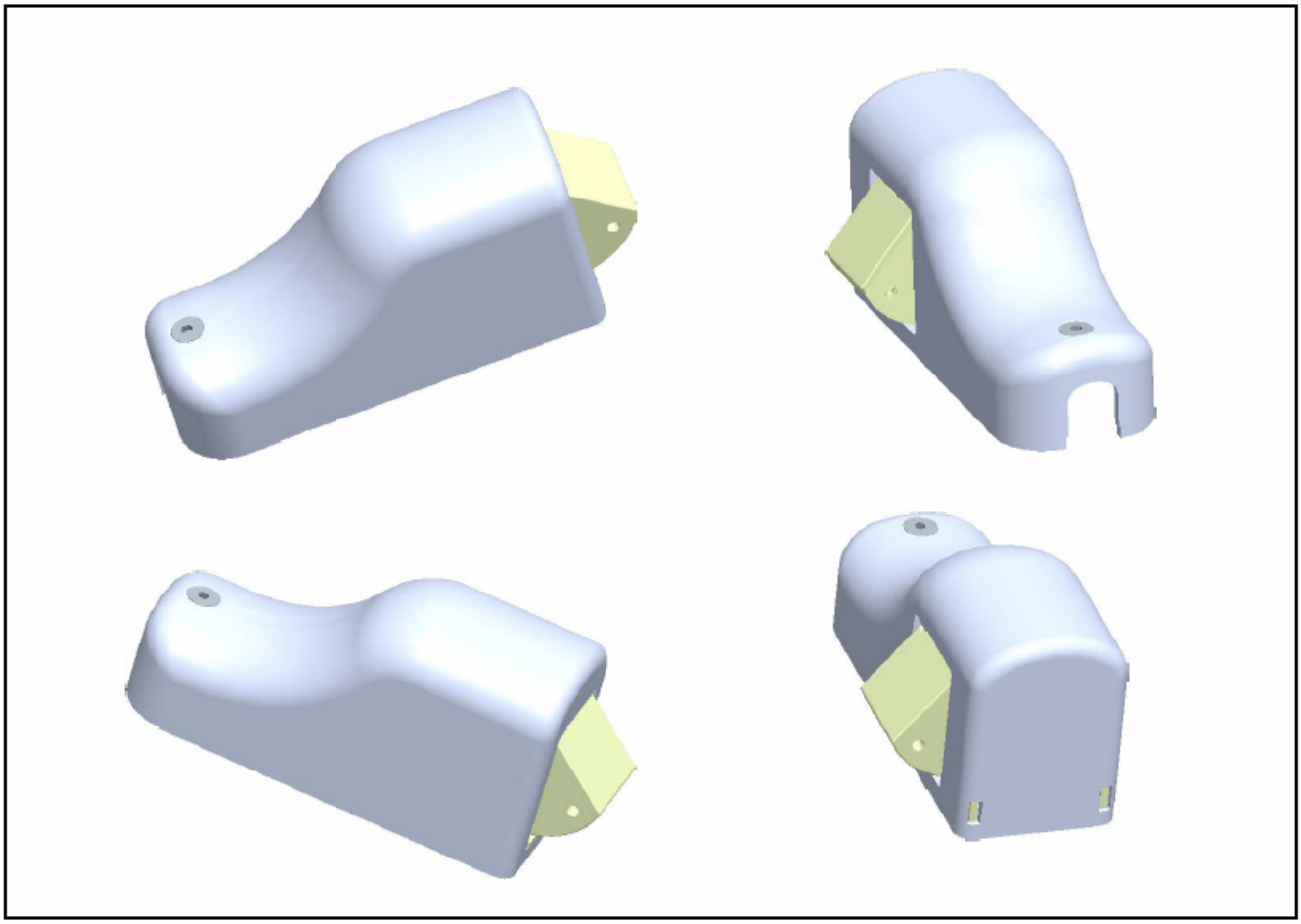

IMPORTANT INFORMATION

PLEASE READ THESE INSTRUCTIONS CAREFULLY

Door – Maximum specification of door on which this product should be fitted.

- Maximum weight of door = 200kg
- Maximum height of door = 2500mm

This product is non handed and can be fitted on both left handed and right handed doors.

For internal use only.

Components

1

Upon unpacking your product you will find the following parts.

Horizontal Pullman
Part No: XPL5000H

G – **Rebate Kit**
- G1 – Rebate Plate × 2
- G2 – Screws × 4

H – **Striker Kit**
- H1 – Striker No 1 × 2
- H2 – Striker No 2 × 2
- H3 – Packers
  - 1mm × 4
  - 2mm × 4
  - 3mm × 4
- H4 – Screws × 6

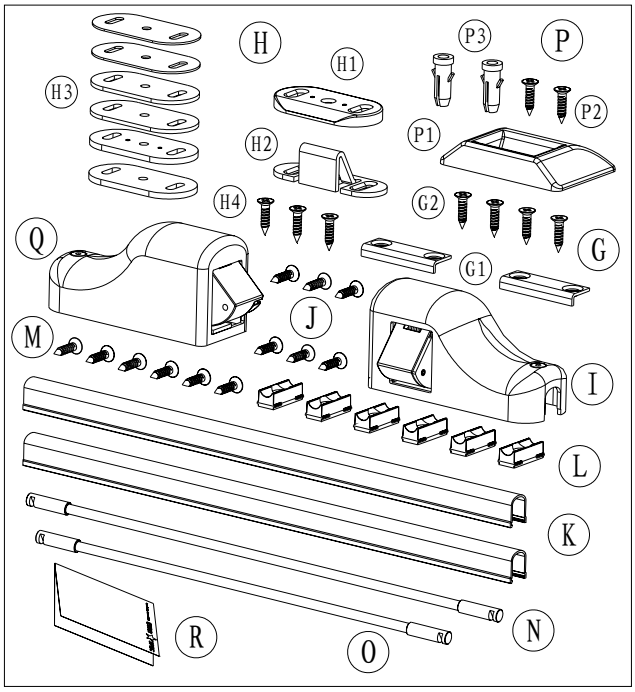

Vertical Pullman
Part No: XPL5000V

H – **Striker Kit**
- H1 – Striker No 1 × 1
- H2 – Striker No 2 × 1
- H3 – Packers
  - 1mm × 2
  - 2mm × 2
  - 3mm × 2
- H4 – Screws × 3

P – **Vertical Floor Plate Kit**
- P1 – Floor Plate × 1
- P2 – Screws × 2
- P3 – Plastic Plugs × 2

I – Horizontal Pullmans × 2
J – Screws × 6
K – Rod Covers × 2
L – Rod Cover Clips × 6
M – Rod Cover Screws × 6
N – Rod Long × 2
O – Rod Short × 2
} Supplied Assembled
R – Fitting Instructions × 1

Q – Vertical Pullmans × 2
J – Screws × 6
K – Rod Covers × 2
L – Rod Cover Clips × 6
M – Rod Cover Screws × 6
Supplied Assembled { N – Rod Long × 2
O – Rod Short × 2
R – Fitting Instructions × 1

Fitting Guide

1

For single or multi-point locking see diagrams below.

Door Suitability

The Horizontal and Vertical Pullmans can be fitted on most wood, steel or aluminium Doors

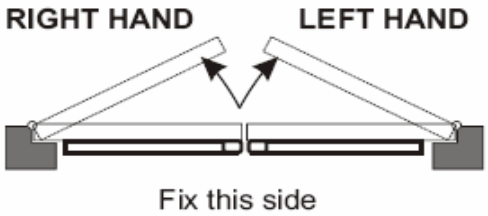

Door size limitations

Maximum clear opening height = 2450mm.

Illustrated with Touchbar

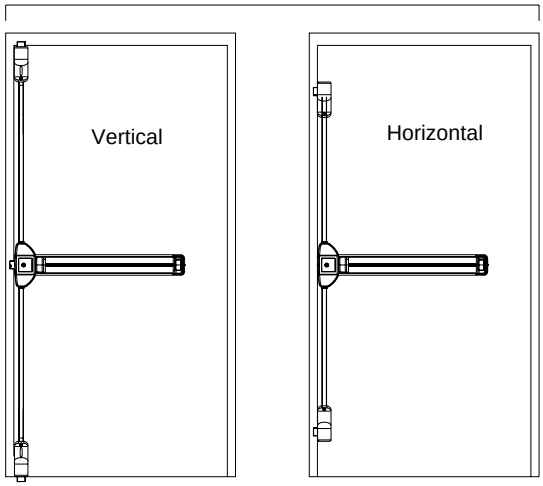

Illustrated with Modular Push Bar Panic Latch

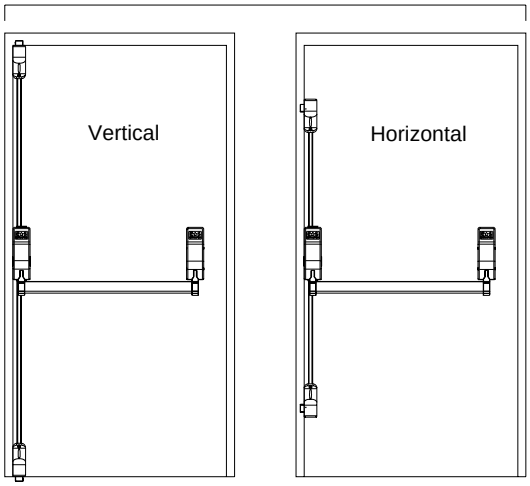

Fitting Guide – (continued)

2

Rebated Double Door **Non Rebated Double Door**

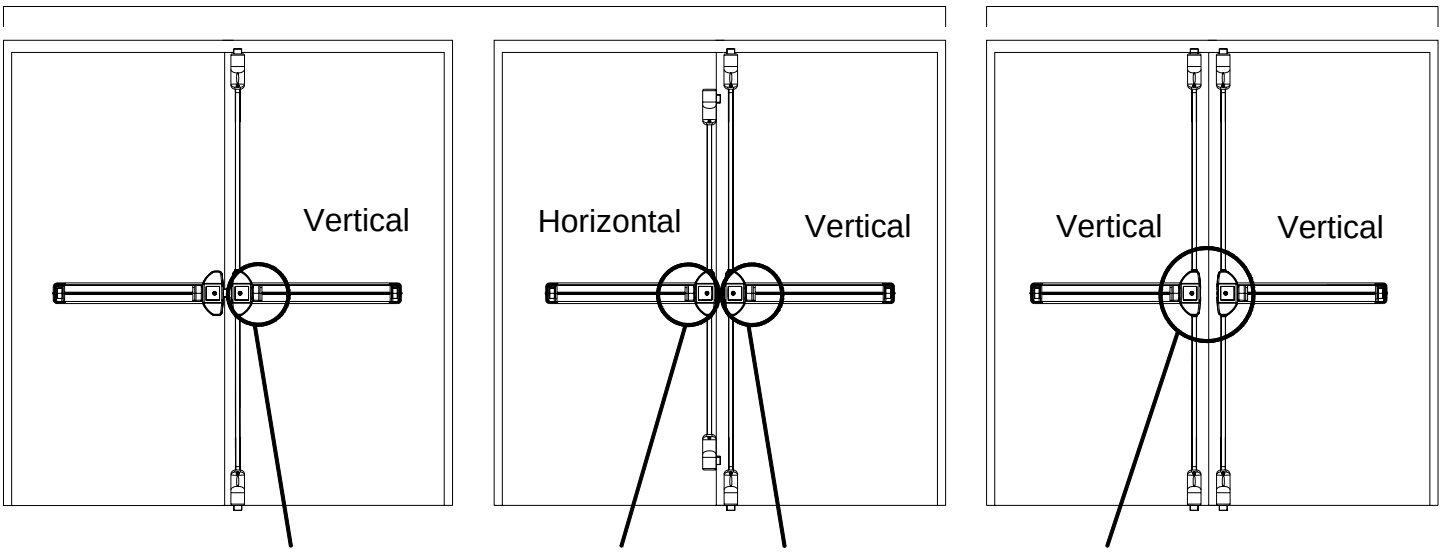

Disable the side latchbolt by fitting the latch cover into the main casing. Refer to Touchbar Fitting Instructions.

Rebated Double Door **Non Rebated Double Door**

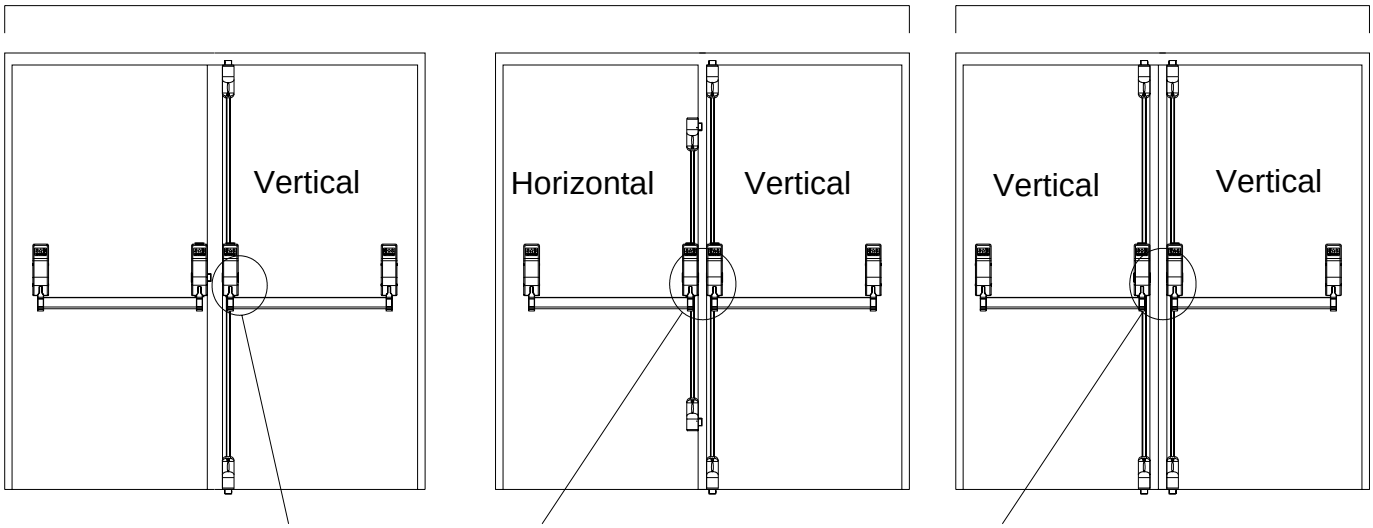

Remove latch sub-assembly from main body and insert latch cover. Refer to Modular Latch instructions.

Preparation

3

1) Check that the door and frame are in good condition and that the door operates correctly.

2) Mark Pullmans centre line

2.1) For Touchbar, close the door. Using the previously fitted Touchbar template, locate the vertical centre line guide lines (23mm, 42mm or 50mm). Draw/mark a vertical line on the door as shown in Figs 3.1 or 3.2. This line is the centre line of both Pullmans and the actuating rods that join the Pullmans to the Touchbar.

For Touchbar

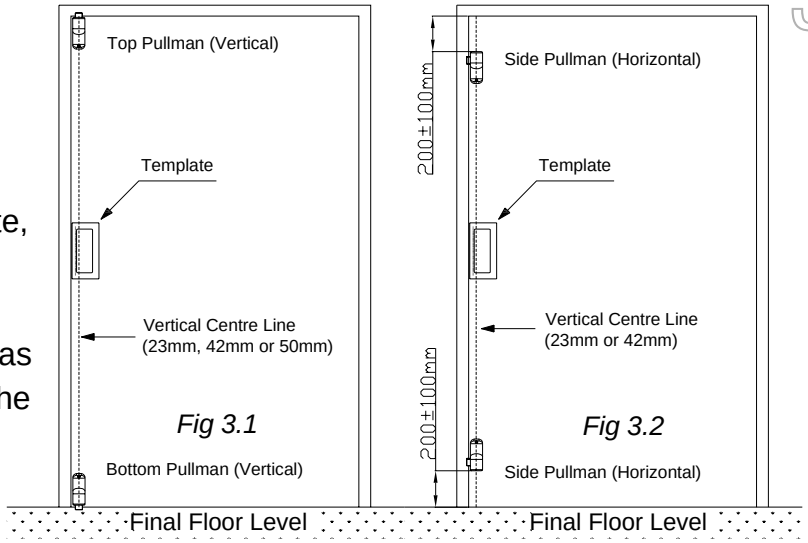

2

2.2) For Modular Push Bar Panic Latch, close the door. Referring to the Modular Push Bar Panic Latch fitting instructions, locate the vertical centre line guide lines (34mm, 54mm or 65mm). Draw/mark a vertical line on the door as shown in Figs 3.3 or 3.4. This line is the centre line of both Pullmans and the actuating rods that join the Pullmans to the Modular Push Bar Panic Latch.

For Modular Push Bar Panic Latch

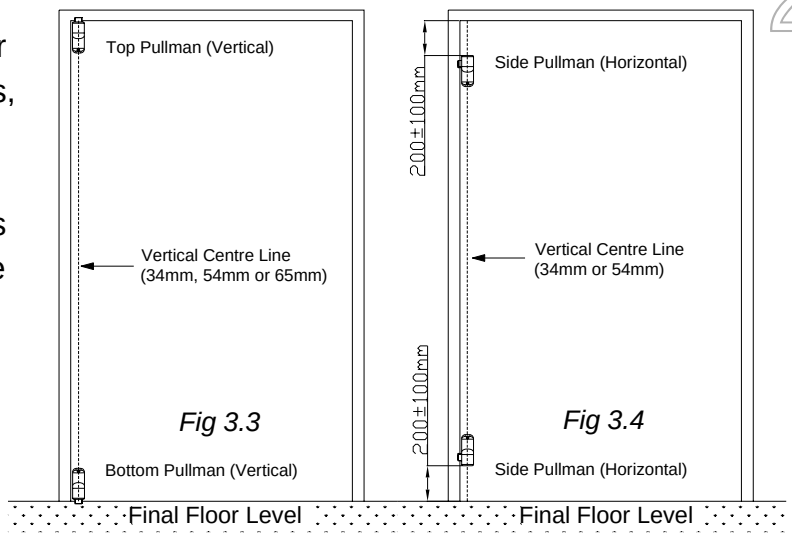

Fig 3.3 *Fig 3.4*

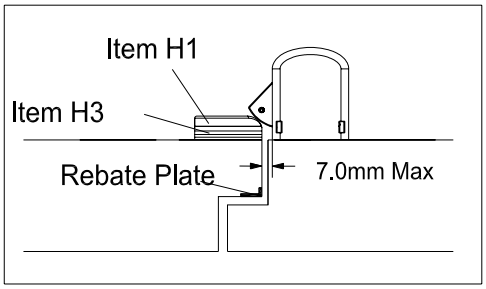

Plan View - Horizontal Pullman Fig 3.5

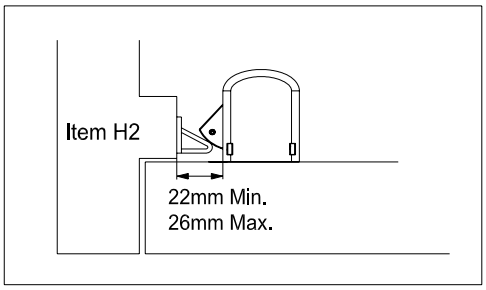

Plan View - Horizontal Pullman Fig 3.6

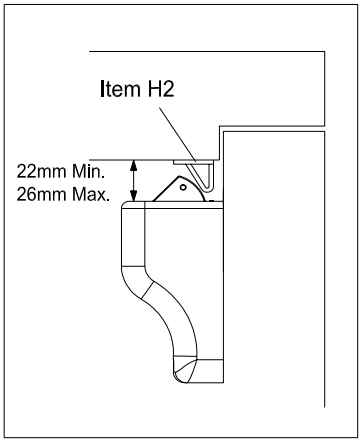

Side View
Top vertical Pullman Fig 3.7

3) Fig 3.5, 3.6 and 3.7 show typical Pullman and Striker fitting. This applies to both horizontal and vertical Pullmans.

Note: The following instructions **Must** be read in association with the Touchbar or Modular Push Bar Panic Latch installation instructions. **See section 4, step 3 of the Touchbar instructions or step 4, section 3 Modular Push Bar Panic Latch and it's supplement instructions (at page 8)**

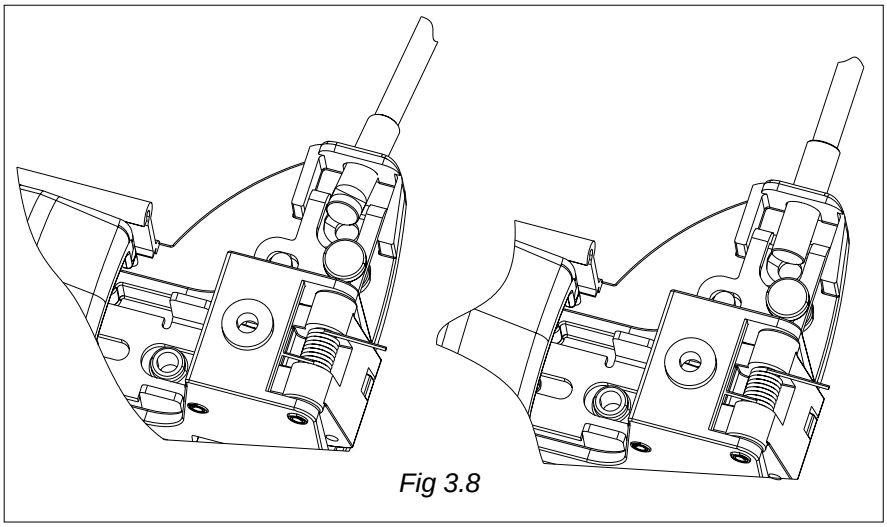

Fig 3.8

4) Before fitting the Touchbar, the short rod needs to be fitted, to do this refer to **Figs 3.8.**

5) Depress the Touchbar and feed the brass end of the short rod into the Touchbar.

6) Rotate the rod until it clips over the cut out in the linkage. (see Fig.3.8)

7) Repeat for the other side.

8) Referring to the Touchbar installation instructions, Section 4, steps 5 – 8. Fit the Touchbar to the door, feed the rod guides (item F6 – Touchbar Instruction) onto the rods before fitting the Touchbar main cover.

4

Note: If fitting horizontal Pullman latches, please go to Section 5

1) Remove covers from vertical Pullman latches (item Q).

2) Fit Pullman top striker (item H2) and bottom floor plate (item P1), aligning centrally with vertical centre guideline with fixing screws supplied (items H4, P2 and P3).

Important: Top striker must be fitted flush against the door face and the floor plate must be fitted 5mm in from the door face. (See Fig 4.1).

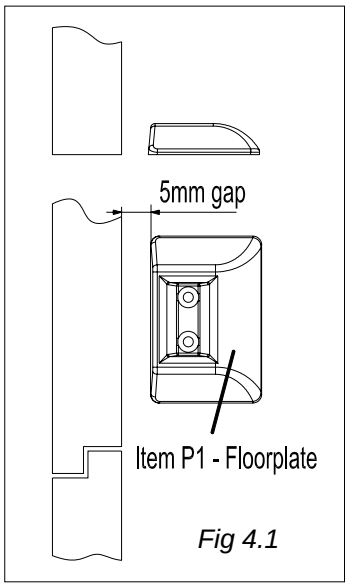

Fig 4.1

3) Offer Pullman latches (item Q) up to top strike (item H2) and bottom floor plate (item P1).

4) Temporarily fit Pullman latches to the door using one of the screws supplied (item J), ensuring alignment with marked vertical centre guideline.

5) Position Pullman latches to obtain the best location between Pullman latch and top strike (item H2) and bottom floor plate (item P1), ensuring that the anti-thrust trigger is fully engaged.

6) Fit rod cover clips (item L), evenly spaced along the marked vertical centre guideline with the screws supplied (item M), ensuring minimum 2 above and 2 below the Panic Latch body.

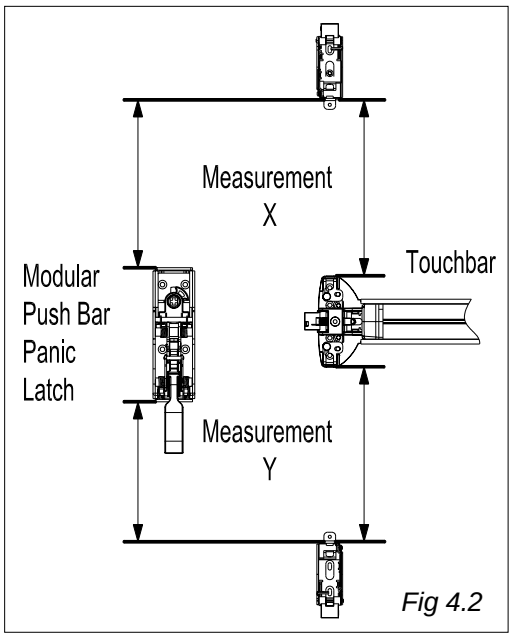

Fig 4.2

7) To fit Pullman rods: if the rods require shortening, take measurements: X and Y **(see Fig 4.2**).
   X = Distance between lower edge of top Pullman to top edge of Latch mechanism.
   Y = Distance between bottom edge of Latch mechanism to top edge of bottom Pullman.
   Deduct these measurements from 1340mm and shorten the long rods (item N) by this amount from the screwed end.

IMPORTANT! – DO NOT CUT THE BRASS END

8) Screw rod (item N) into adjuster by 40 – 50mm (**See Fig 4.3**). Slide Rod Guides (item F6) from Touchbar or Modular Push Bar Panic Latch fixing pack over the rods. Remove temporarily fitted Pullman latches from door and fit brass ends into Pullman latches.

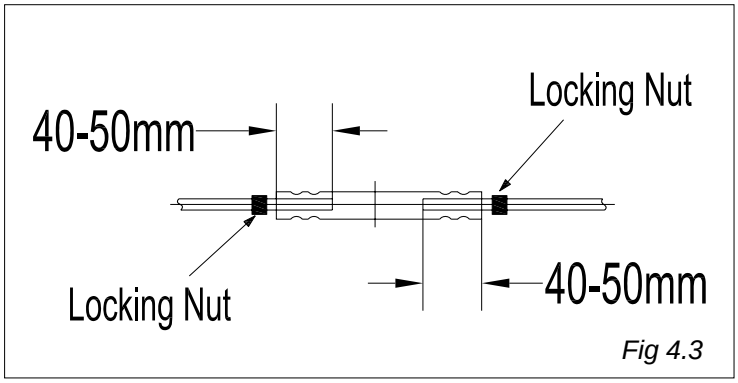

Fig 4.3

Installation – Fitting Vertical Pullman Latches (continued)

4

9) Fully fit both Pullman latches to door with the screws supplied (item J), ensuring alignment with marked vertical centre guideline. To adjust the rods, undo the two Locking Nuts and turn the Adjuster either clockwise or anti-clockwise to obtain the correct operation of the Pullmans. Retighten Locking Nuts. (See Fig 4.3).

10) Check for correct operation.

11) To fit rod covers (item K): take a measurement from the Panic Latch rod cover to the centre of Pullman latch cover fixing hole (See Fig 4.4). Cut rod covers to the measured lengths and fit by clipping over the rod clips (item L).

12) Refit Pullman latch covers.

13) Recheck for correct operation.

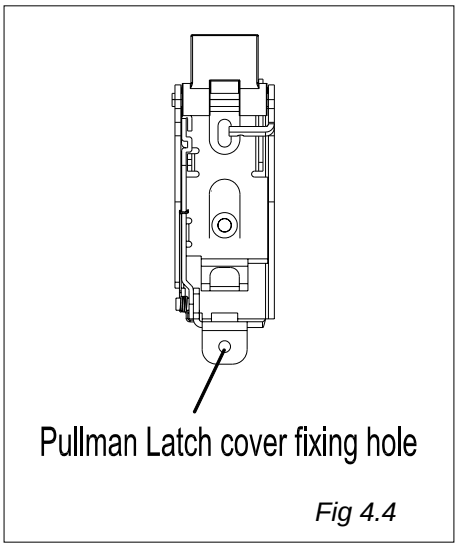

Fig 4.4

Installation – Fitting Horizontal Pullman Latches

5

1) Remove cover from horizontal Pullman latches (item I) and offer up to door, stopping 100 to 200mm from top and bottom. (**Refer to Fig 3.1 – 3.4**)

2) Temporarily fit Pullman latches to the door using one of the screws supplied (item J), ensuring alignment with vertical centre guideline.

3) Fit rod cover clips (item L), evenly spaced along the marked vertical centre guideline with the screws supplied (item M), ensuring minimum 2 above and 2 below the Panic Latch body.

4) To fit Pullman rods: If the rod require shortening, take measurements: X and Y (**see Fig 5.1**).

X = Distance between lower edge of top Pullman to top edge of Latch mechanism.

Y = Distance between bottom edge of Latch mechanism to top edge of bottom Pullman.

Deduct these measurements from 1340mm and shorten the long rods (item N) by this amount from the screwed end.

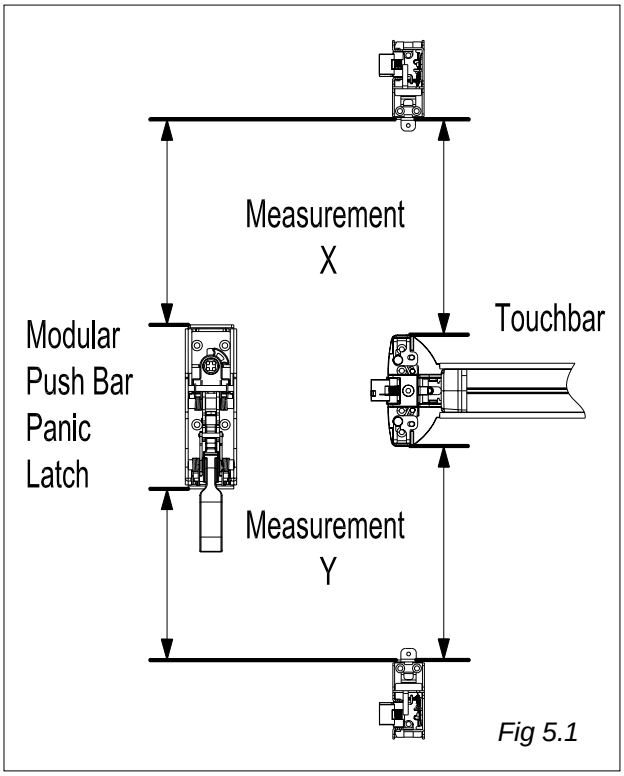

Fig 5.1

IMPORTANT! – DO NOT CUT THE BRASS END.

5) Screw rod (item N) into adjuster by 40 – 50mm (**See Fig 5.2**). Slide Rod Guides (item F6) from Touchbar or Modular Push Bar Panic Latch fixing pack over the rods. Remove temporarily fitted Pullman latches from door and fit brass ends into Pullman latches.

6) Fully fit both Pullman latches to door with the screws supplied (item J), ensuring alignment with marked vertical centre guideline. To adjust the rods, undo the two Locking Nuts and turn the Adjuster either clockwise or anti-clockwise to obtain the correct operation of the Pullmans. Retighten Locking Nuts. (**See Fig 5.2**).

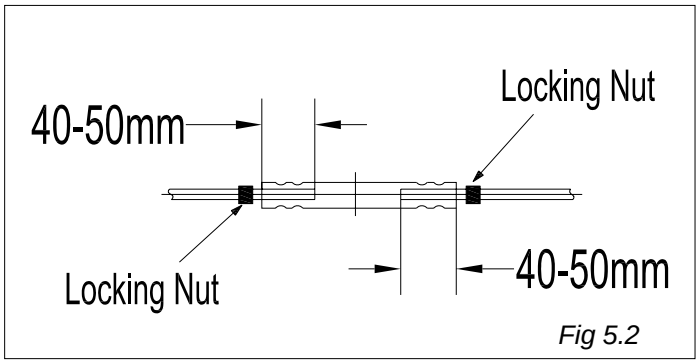

Fig 5.2

7) Check for correct operation.

8) To fit rod covers (item K): take a measurement from the Panic Latch rod cover to the centre of Pullman latch cover fixing hole (**See Fig 5.3**). Cut rod covers to the measured lengths and fit by clipping over the rod clips (item L).

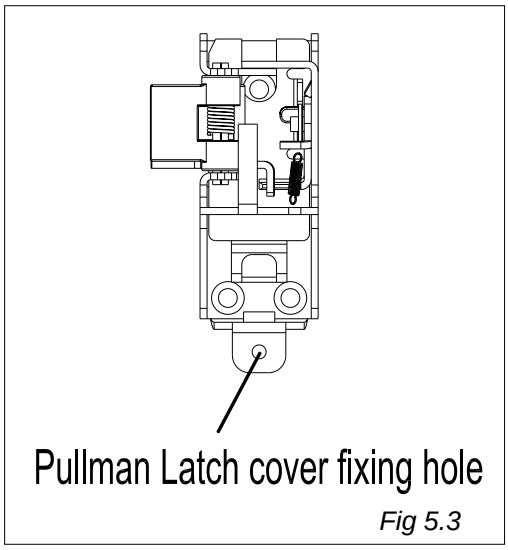

Fig 5.3

9) Refit Pullman latch covers.

10) Fit striker plates (items H1 with H3 packers or item H2) in accordance with preparation **Figs 3.4 and 3.5**. Position striker and packers to obtain the best location between striker and Pullman latch. secure the striker and packers using the screws supplied (item H4).

11) Recheck for correct operation.

Installation – Optional Double Door Rebate Plates

6

1) If fitting to double door set, fit the optional rebate plates (item G) as shown in Fig 6.1.

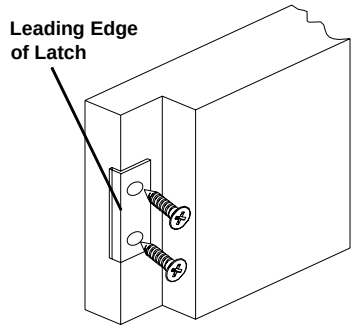

Fig 6.1

Final Checks

7

Once the Installation is complete, check that the Touchbar or Modular Push Bar Panic Latch operates correctly. To test this, apply pressure to the doors and try to release it using the Touchbar or Modular Push Bar Panic Latch.

Final Checks

8

This Touchbar or Modular Push Bar Panic Latch is fitted to comply with EN1125. No instruction of operation is required. For the end user the Touchbar or Modular Push Bar Panic Latch should be easily operated by hand or body pressure in a panic situation.

Maintenance

9

Ensure that the Strikers are secure, clean and free from any obstruction. Check all latches operate correctly.

PLEASE LEAVE THESE INSTRUCTIONS WITH THE END USER

EURO SPEC
ARCHITECTURAL HARDWARE

Stancliffe Street
Mill Hill
Blackburn
BB2 2QR
Tel: +44 (0) 1254 274100
Fax: +44 (0) 1254 274111
Web: www.eurospec.co.uk